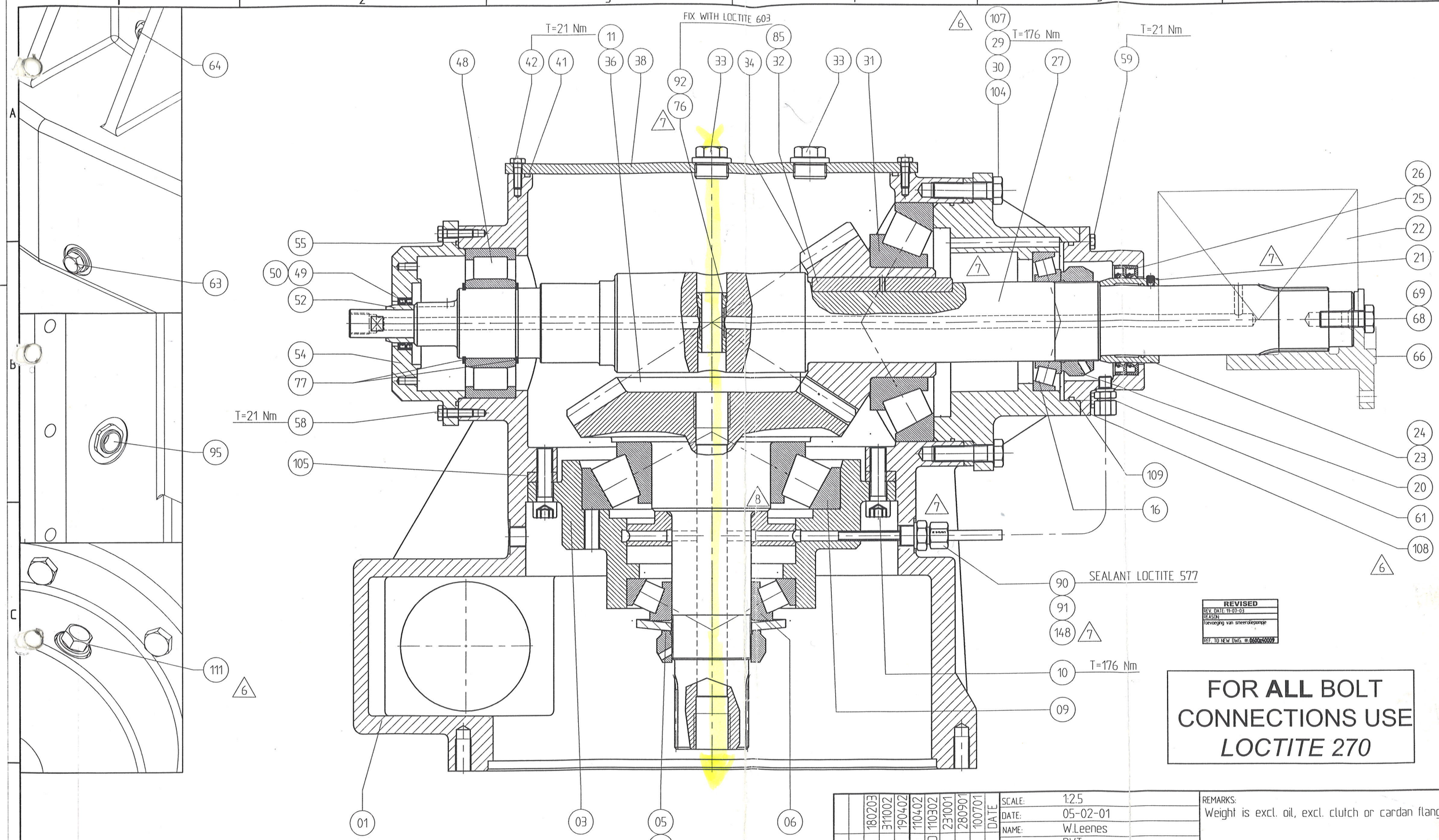

Oil Content FULL GEARBOX with wormgears	46 Liter
Oil Content FULL GEARBOX /wormgears	57 Liter
Bearing Clearance NU 2314 E	0.040- 0.075 mm
Bearing Margins Pinion Shaft	0.00 mm
Bearing Margins Vertical Shaft	0.00 mm
Tooth Clearance	0.17 - 0.30 mm

Note: DISC SPRING ACC. DIN 2092
PRELOADING BEARINGS IN COMBINATION WITH LOCK NUT
PRELOADING SETUP DISTANCE:
0.21 mm

REV.	SUBJECT	DATE
8	0703 chg bearing.	180203
7	Several Changes	311002
6	Several changes	190402
5	DISC SPRING PRESET CHG	110402
4	OUTSIDE SPACERS REBUILD	110302
3	DIFF. OIL LEVEL GLASS	231001
2	DISC SPRING ADDED	280901
1	CARDAN FLANGE CHG	100701

REVISED
REV. DATE: 11-07-03
REASON
toevoeging van smeerolielepompje
REF. TO NEW DWG. #: 0600z40009

FOR **ALL** BOLT CONNECTIONS USE *LOCTITE 270*

SCALE: 1:2.5
DATE: 05-02-01
NAME: W.Leenes
CHECKED: DVT
MATERIAL: -
WEIGHT: ±430 kg
CLASSIFICATION:

REMARKS:
Weight is excl. oil, excl. clutch or cardan flange

PAINT SYSTEM:

TITLE
HRP 4000 UPPER GEAR BOX

VOOR AFMETINGEN ZONDER OPGEGEVEN TOLERANTIE GELDT:
FOR ALL DIMENSIONS WITHOUT STATED TOLERANCE,APPLICABLE: ±0,5
AFMETINGEN IN MILLIMETER
DIMENSIONS IN MILLIMETER
SCHERPE KANTEN BREKEN 0.5x45°
SHARP EDGES TO BE CHAMFERED 0.5x45°
OPPERVLAKTE RUWHEID
SURFACE ROUGHNESS 3/4MAX 3.2 µm

THRUSTER SYSTEMS
Zaag 27
P.O. Box 2020
2930 AA Krimpen aan de Lek
Holland
E-mail ID info@hrp.nl
Site HTTP://www.hrp.nl
Phone +31 (0)180 - 519988
Fax +31 (0)180 - 519256

AMERIKAANSE PROJECTIE
AMERICAN PROJECTION (ISO 128 I)

The drawing remains the property of HRP Nederland B.V. in Krimpen a/d Lek and may without the written permission of the owner not be multiplied/or used for third parties/or be given to third parties for perusal

A2

DRAWING.NR
0600z40008

ORDER.NR